stay connected

Modlink MSDD-set: Frame 4000-68223-0000000,

insert 4000-68000-1200000 + 4000-68000-1260000

Link to Product

Illustration

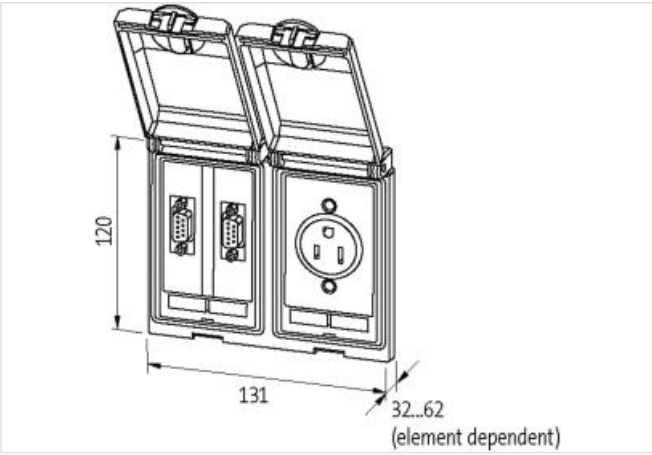

Product may differ from Image

The information in this brochure has been compiled with the utmost care.
Liability for the correctness completeness and topicality of the information is restricted to gross negligence. Version: 2022-11-13

MURR ELEKTRONIK
stay connected

Frame	
suitable for mounting with wall thickness	1...5 mm
Protection	IP65
Temperature range	-10...+60 °C (storage temperature -25...+60 °C)
Housing	Frame: zinc die-casting, with surface finishing, Lid: plastic, PC transparent
RJ45	
Operating current (UL Rating)	max. 175 mA
Locking of ports	Snap In
Connection front side	RJ45
Connection rear side	RJ45
Operating voltage (UL Rating)	max. 30 V AC/42.4 V DC
Specification	CAT5e, Class D, 100 MHz, (EN 50173-1)
Shielding plate	
Tightening torque	0.9 Nm ±0.1
Connection	Threaded hole M4
Product article number of manufacturer	4000-68223-1201260

The information in this brochure has been compiled with the utmost care.
Liability for the correctness completeness and topicality of the information is restricted to gross negligence. Version: 2022-11-13