MURR ELEKTRONIK
stay connected

Modlink MSDD-set: Frame 4000-68123-0000000,

insert 4000-68000-0020000 + 4000-68000-1520000

Link to Product

Illustration

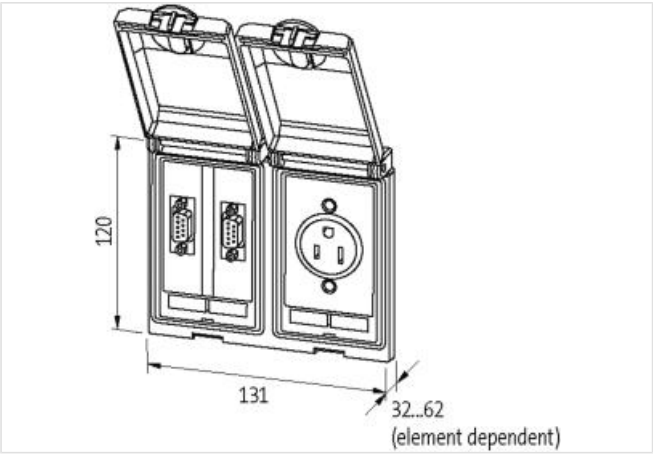

Product may differ from Image

The information in this brochure has been compiled with the utmost care.
Liability for the correctness completeness and topicality of the information is restricted to gross negligence. Version: 2022-11-13

Frame	
suitable for mounting with wall thickness	1...5 mm
Protection	IP65
Temperature range	-10...+60 °C (storage temperature -25...+60 °C)
Housing	Zinc die-casting, with surface finishing
RJ45	
Operating current (UL Rating)	max. 175 mA
Locking of ports	Snap In
Connection front side	RJ45
Connection rear side	RJ45
Operating voltage (UL Rating)	max. 30 V AC/42.4 V DC
Specification	CAT5e, Class D, 100 MHz, (EN 50173-1)
SUB-D9	
Connection rear side	SUB-D (male)
Operating current (UL Rating)	max. 175 mA
Connection front side	SUB-D (male)
Locking of ports	UNC 4...40 bolt
Operating voltage (UL Rating)	max. 30 V AC/42.4 V DC
Operating current	3 A
No. of poles	9-pole
Operating voltage	48 V AC/DC
Germany (VDE)	
Connection	Screw terminals: max. 2× 6 mm² (AWG 10)
Operating voltage	250 V AC
No. of poles	2 + PE
Operating current	16 A
Product article number of manufacturer	4000-68123-0021520

The information in this brochure has been compiled with the utmost care.
Liability for the correctness completeness and topicality of the information is restricted to gross negligence. Version: 2022-11-13