MURR ELEKTRONIK
stay connected

ABB CONTACTOR SUPPRESSOR

RC, 110VAC/DC

110 V AC/DC
230 V AC/DC
RC
For other configurations and voltages, please inquire.

Link to Product

Illustration

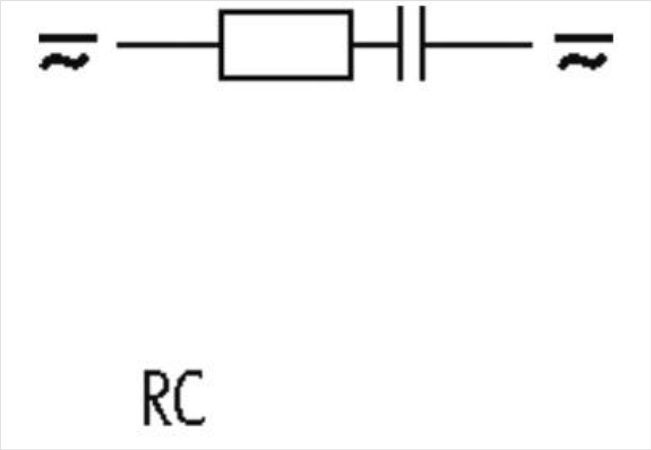

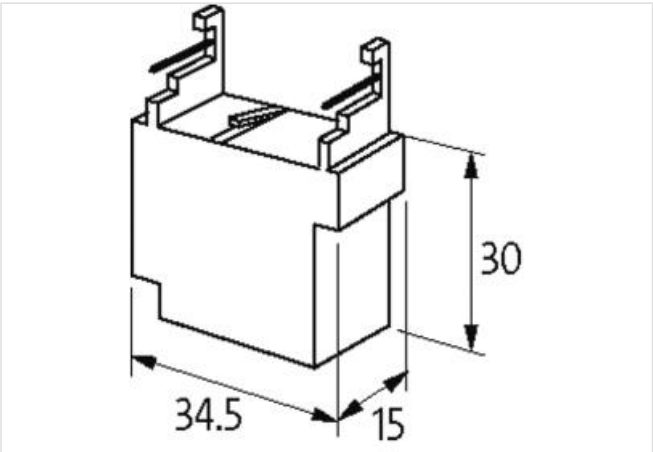

Product may differ from Image

Technical Data

Input voltage	110...250 V AC/DC
Material	Flame retardant plastic acc. to (UL 94)
Damping factor	approx. 1.5× UN
Connection wires	Plug contact

General data

Temperature range	-20...+70 °C

The information in this brochure has been compiled with the utmost care.
Liability for the correctness completeness and topicality of the information is restricted to gross negligence. Version: 2022-11-13

Dimensions H×W×D	40×34.5×15 mm
Appropriate contactors	
	A 9...A 16
Product article number of manufacturer	21172

The information in this brochure has been compiled with the utmost care.
Liability for the correctness completeness and topicality of the information is restricted to gross negligence. Version: 2022-11-13