MURR ELEKTRONIK
stay connected

MEF EMC-FILTER 1-PHASE 2-STAGE

I:6A U:250 VAC/300 VDC snap on

Current: 6 A
DIN-rail mountable
Attenuation curves on request.
against symmetrical interferences

Link to Product

Illustration

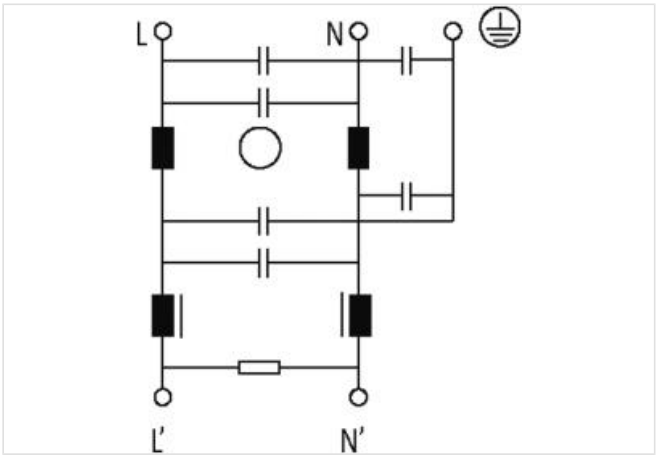

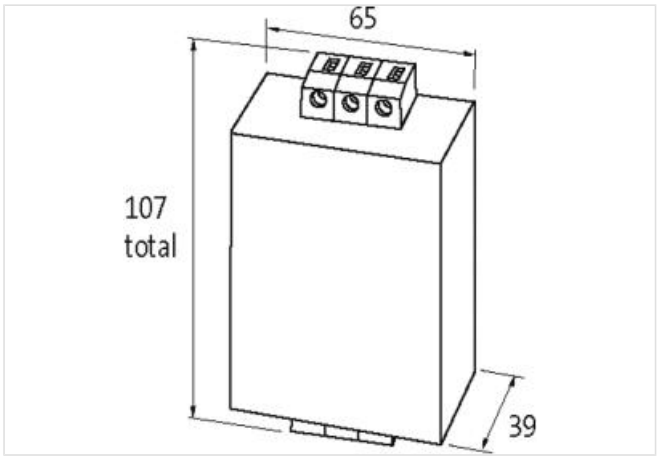

Product may differ from Image

Technical Data

Operating voltage	max. 250 V AC/300 V DC
Connection cross section	0.2...6 mm² single core (AWG 24...9); 0.2...4 mm² multiple core (AWG 24...11)
Operating frequency	50...60 Hz
Overload current	18× (IN t) max. 0.5 ms; 1.5× (IN t) max. 1 min. (1× per hour)
Consumption	max. 5 mA (250 V AC)

General data

The information in this brochure has been compiled with the utmost care.
Liability for the correctness completeness and topicality of the information is restricted to gross negligence. Version: 2022-11-13

Mounting method	DIN-rail mountable TH35 (EN 60715)
Test isolation voltage	2.7 kV (L - N), 2 s; 2.1 kV (L - L), 2 s (EN 60939-2)
Climatic category	25/085/21 (EN 60068-1)
Connection	Screw connection, touch protected
Dimensions H×W×D	107×65×39 mm
Description	
Application	symmetrical interferences: units with high repetitions of the switching processes, - switch mode P.S.U.s, - phase angle controller, - supply of universal motors, - behind transformers
Functional description	The single phase 2-stage EMC filters MEF 1/2 are used in the range 0.1...30 MHz to suppress cable carried interference on mains and control cables. The best filter performance is achieved by using short connection wires (suggestion: earth connection < 10
Product article number of manufacturer	10464

The information in this brochure has been compiled with the utmost care.
Liability for the correctness completeness and topicality of the information is restricted to gross negligence. Version: 2022-11-13