M-13073	1

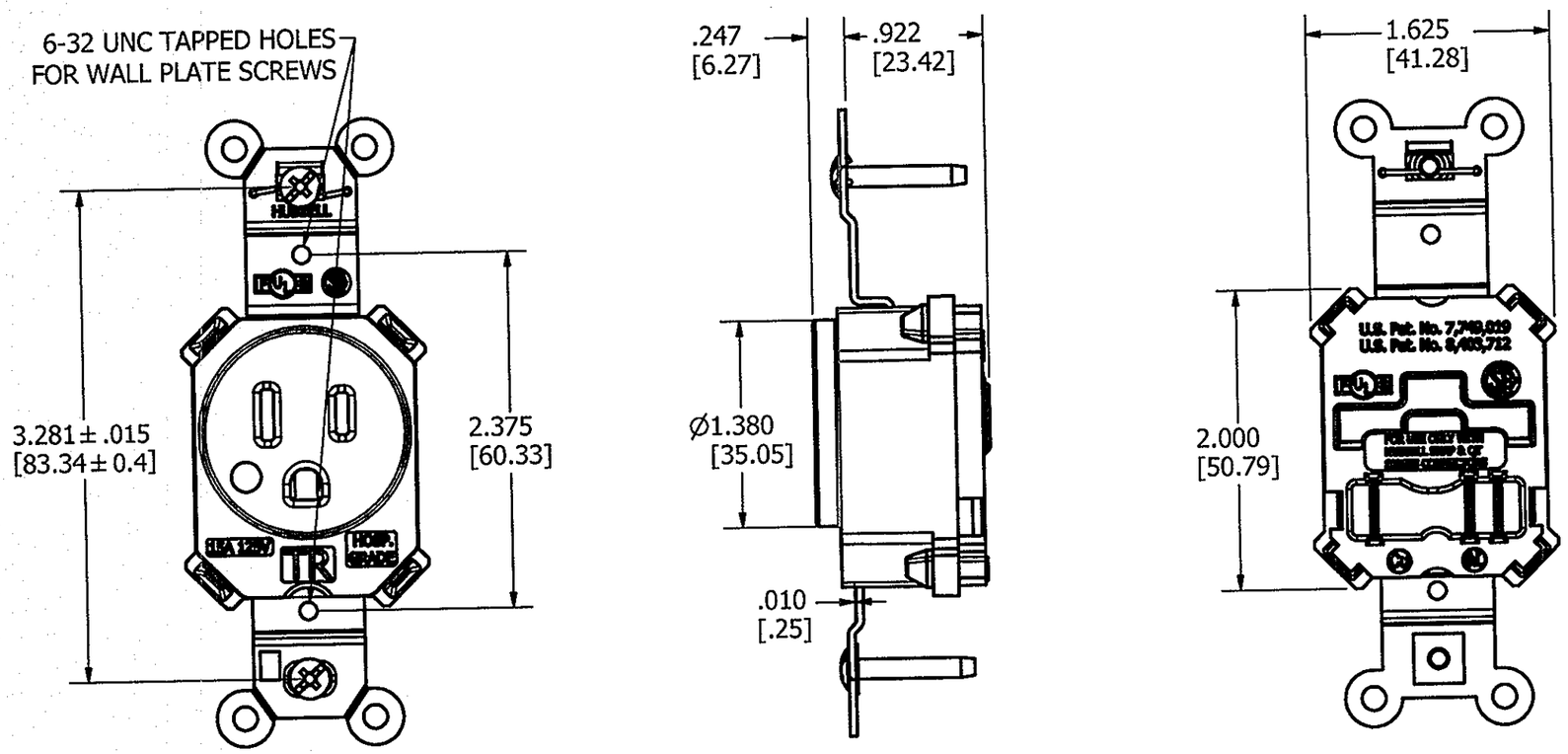

SHOWN 15A RECEPTACLE

RATING	BROWN	IVORY	GRAY	WHITE	BLACK	ALMOND	LIGHT ALMOND	RED	BLUE
15A	SNAP8210TR	SNAP8210ITR	SNAP8210GYTR	SNAP8210WTR	SNAP8210BKTR	SNAP8210ALTR	SNAP8210LATR	SNAP8210RTR	SNAP8210BLTR
20A	SNAP8310TR	SNAP8310ITR	SNAP8310GYTR	SNAP8310WTR	SNAP8310BKTR	SNAP8310ALTR	SNAP8310LATR	SNAP8310RTR	SNAP8310BLTR

NOTES:
1. DIMENSIONS ARE IN INCHES [MM].
2. ALL DEVICES UL LISTED AND CSA CERTIFIED.

LIST OF PARTS

DESCRIPTION	MATERIAL	FINISH
TOP	NYLON 6/6	SPI A-3
BASE	NYLON 6/6	SPI A-3
LINE CONTACTS	BRASS	
GROUND CONTACT	BRASS	
BRIDGE	.04 GALV STL	
STAPLE	S.S.	
WASHER	PVC FILM	BLACK
MOUNTING SCREWS	STEEL	ZINC PLT

DIMENSION SHEET FOR CAT. NO. SEE TABLE

REPAIRABLE ☐ NON-REPAIRABLE ☐

SYM	DESCRIPTION	APPRO	DATE
1	RELEASED PER DCN21263 EB	TLS	07/06/2015

THE DESIGN AND DIMENSIONS OF THE PRODUCT SHOWN ON THIS DRAWING ARE SUBJECT TO CHANGE WITHOUT NOTICE

TITLE
SINGLE SNAP CONNECT RECEPTACLE, 15/20A 125V HOSP. GRADE, TR

TOLERANCES UNLESS OTHERWISE SPECIFIED
FRACTIONS ±1/64
DECIMALS ±.005
ANGLES ±2°

WIRING DEVICE-KELLEMS
HUBBELL INCORPORATED
SHELTON, CT

DR. BY ebazayev APP. BY TLS
TR. BY SCALE 1:1
CHK'D BY TLS DATE 7/6/2015

B

M-13073

1

CODE 74545